SE SERIES

可空轉立式耐酸鹼泵
VERTICAL PUMP

化學氣體乾式軸封
Chemical vapor and dry vapor seal

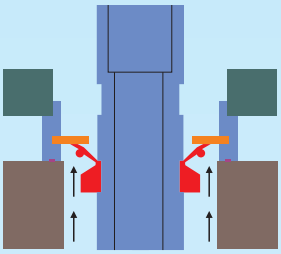

停止中
Stop

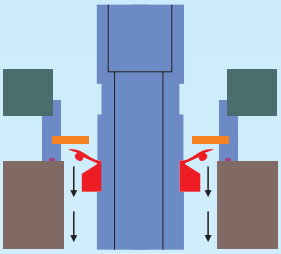

運轉中
Running

CAPACITY:3.2–18m³/h

型號說明 MODEL IDENTIFICATION

SE P 50 3 2 E 5

1 2 3 4 5 6 7

1.機型編號 Model

SE-可空轉立式泵 Idling-type vertical pump

2.泵體材質 Pump Body

P-PP(可以省略) F-PVDF E-CFRETFE

3.入口口徑 Inlet Diameter

50-2"

4.馬力 Power

0-1/2HP 1-1HP 2-2HP 3-3HP

5.極數 Pole

4-4P 2-2P

6.密封材質 Seal

E-EPDM V-VITON N-NBR

7.頻率 Frequency

5-50HZ 6-60HZ

特點及優點

1.採用FRPP/PVDF材質射出成型，耐酸鹼，抗腐蝕性。適用溫度：FRPP-65℃以下，PVDF-90℃以下。
2.乾式軸封設計，防止酸氣進入馬達損壞培林。
3.可空轉使用，絕不會因空運轉而損壞。
4.可使用在含有結晶顆粒的液體。
5.適合各種酸鹼液循環、冷卻、噴洗設備、廢氣塔、蝕刻機、廢水處理等。
6.適合無電解鎳化學銅及各種特殊電鍍液之循環輸送。

Features and benefits

1.The pump is made by the injection molding of the FRPP/PVDF material, which is resistant to acid, alkaline and corrosion, with usage temperature of: Below 65℃ for FRPP, below 90℃ for PVDF.
2.Dry shaft seal design, preventing acid gas from penetrating motor to damage the bearing.
3.Able to conduct idling operation and will never be damaged due to idle running.
4.Able to work with liquids containing crystallized particles.
5.Adaptable to various circulation/cooling/spay-rinsing equipment of various acid and alkaline liquids,exhaust towers, engraving machine, waste water treatment, etc.
6.Adaptable to circulating transport of various special electroplate liquids and those electroless nickel and chemical copper.

性能曲線圖 Performance curve graph

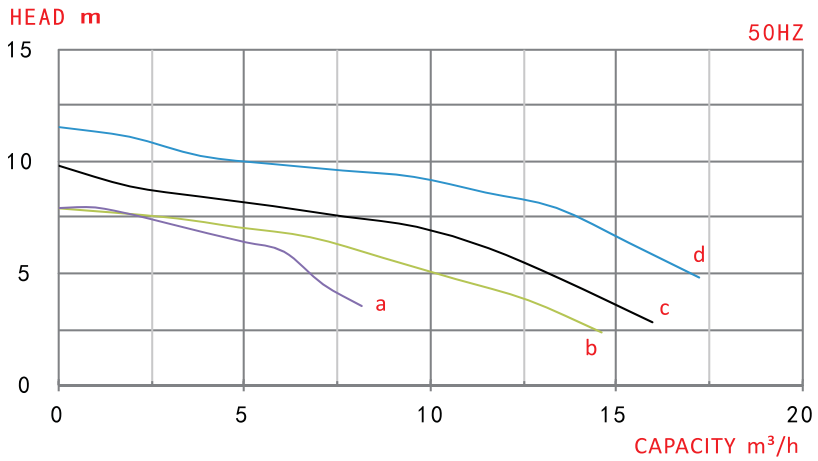

規格表 Specifications

測試介質：清水 / 比重：1.0
Test medium: Water / Proportion: 1.0

型式Model	口徑 Diameter (In-out)	動力Power			50HZ			重量 Weight (kg)
		相數 Phase (Φ)	極數 Pole (P)	馬力 Power (HP)	曲線 Curve	流量 Capacity (m³/h)	揚程 Head (m)	
SE 5002	2"x1"	3	2	0.5	a	3.2 6.3 8.0	7.0 5.0 3.0	16
SE 5012	2"x1.5"	3	2	1	b	6.3 12.5 15.0	6.0 4.0 2.5	21
SE 5022	2"x1.5"	3	2	2	c	6.3 12.5 16.0	8.0 6.0 3.0	28
SE 5032	2"x1.5"	3	2	3	d	6.3 12.5 18.0	10.0 8.0 3.5	31

尺寸圖 Dimensions

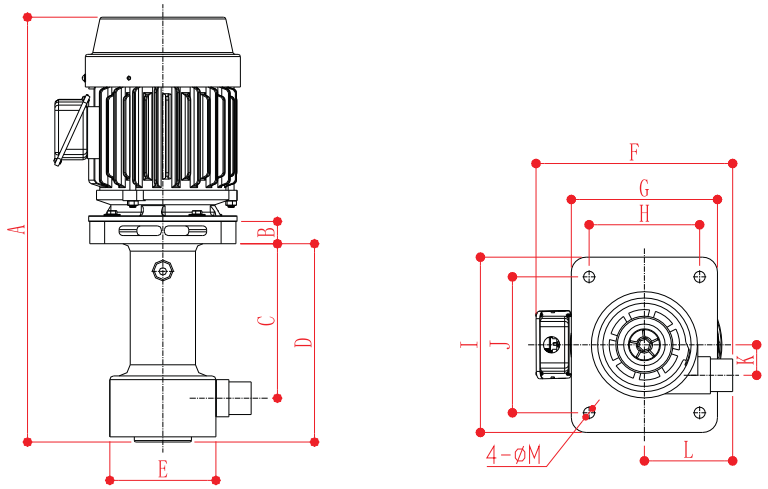

Unit:mm

型式Model	A	B	C	D	E	F	G	H	I	J	K	L	M
SE 5002	543	30	208	265	143	253	195	149	236	179	41	119	15
SE 5012	543	30	208	265	143	253	195	149	236	179	41	119	15
SE 5022	557	30	208	265	143	257	195	149	236	179	41	119	15
SE 5032	619	30	208	265	143	265	195	149	236	179	41	119	15

零件圖表 Parts chart

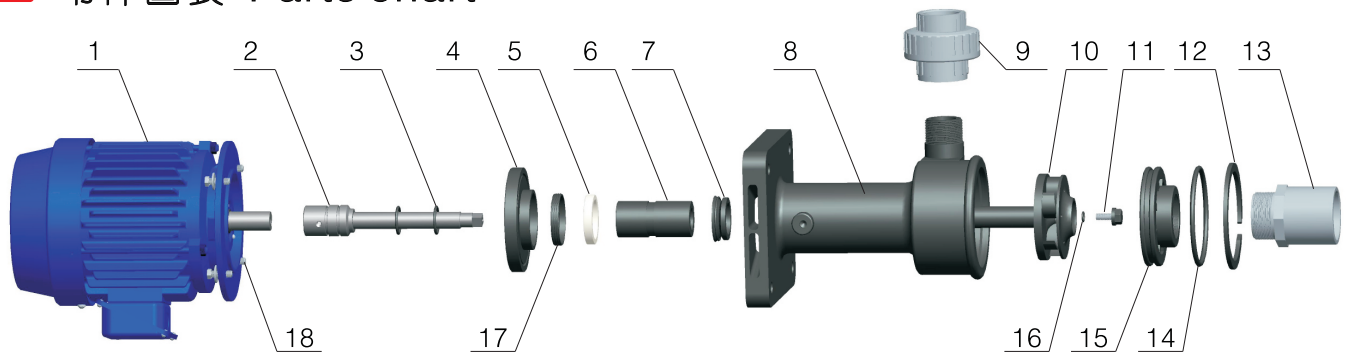

NO.	名稱 PARTS
1	電機 Motor
2	軸芯 Main Shaft
3	軸芯O環 Main Shaft O-ring
4	液封座 Vapor Seal Seat
5	陶瓷 Ceramic
6	軸芯套筒 Main Shaft Sleeve
7	液封 V-ring
8	主體 Main Body
9	由任 Union
10	葉輪 Impeller
11	葉輪螺帽 Impeller Nut
12	C型扣環 C-Clip
13	止閥接頭 Check Valve Joint
14	上座O環 Front Cover O-ring
15	上座 Front Cover
16	葉輪螺帽O環 Impeller Nut O-Ring
17	陶瓷墊片Ceramic Gasket
18	螺絲 Bolt

SEP SERIES

可空轉立式耐酸鹼泵
VERTICAL PUMP

化學氣體乾式軸封
Chemical vapor and dry vapor seal

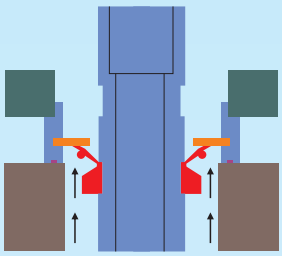

停止中
Stop

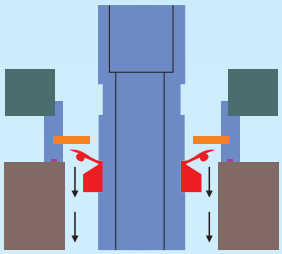

運轉中
Running

CAPACITY:6.3–25m³/h

型號說明 MODEL IDENTIFICATION

SEP P 50 3 2 E 5

1 | 2 | 3 | 4 | 5 | 6 | 7

1.機型編號 Model

SEP-可空轉立式泵 Idling-type vertical pump

2.泵體材質 Pump Body

P-PP(可以省略) F-PVDF E-CFRETFE

3.入□□徑 Inlet Diameter

50-2"

4.馬力 Power

2-2HP 3-3HP 5-5HP

5.極數 Pole

4-4P 2-2P

6.密封材質 Seal

E-EPDM V-VITON N-NBR

7.頻率 Frequency

5-50HZ 6-60HZ

SEP SERIES
可空轉立式耐酸鹼泵

特點及優點

1.採用FRPP/PVDF材質射出成型，耐酸鹼，抗腐蝕性。適用溫度：FRPP-65℃以下，PVDF-90℃以下。
2.乾式軸封設計，防止酸氣進入馬達損壞培林。
3.可空轉使用，絕不會因空運轉而損壞。
4.可使用在含有結晶顆粒的液體。
5.適合各種酸鹼液循環、冷卻、噴洗設備、廢氣塔、蝕刻機、廢水處理等。
6.適合無電解鎳化學銅及各種特殊電鍍液之循環輸送。

Features and benefits

1.The pump is made by the injection molding of the FRPP/PVDF material, which is resistant to acid, alkaline and corrosion, with usage temperature of: Below 65℃ for FRPP, below 90℃ for PVDF.
2.Dry shaft seal design, preventing acid gas from penetrating motor to damage the bearing.
3.Able to conduct idling operation and will never be damaged due to idle running.
4.Able to work with liquids containing crystallized particles.
5.Adaptable to various circulation/cooling/spay-rinsing equipment of various acid and alkaline liquids,exhaust towers, engraving machine, waste water treatment, etc.
6.Adaptable to circulating transport of various special electroplate liquids and those electroless nickel and chemical copper.

性能曲線圖 Performance curve graph

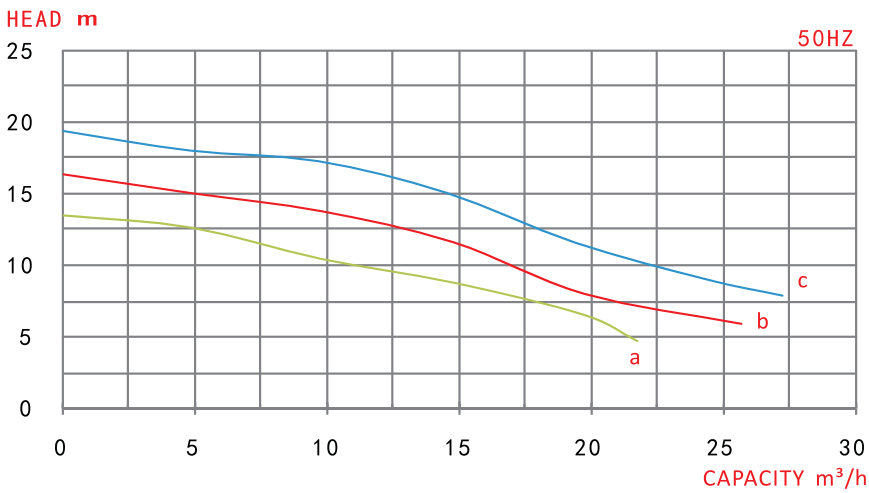

規格表 Specifications

測試介質：清水 / 比重：1.0
Test medium: Water / Proportion: 1.0

型式Model	口徑 Diameter (In-out)	動力Power			50HZ			重量 Weight (kg)
		相數 Phase (Φ)	極數 Pole (P)	馬力 Power (HP)	曲線 Curve	流量 Capacity (m³/h)	揚程 Head (m)	
SEP 5022	2"x1.5"	3	2	2	a	6.3 12.5 22.0	11.0 9.0 4.0	21
SEP 5032	2"x1.5"	3	2	3	b	6.3 12.5 25.0	15.0 12.5 5.0	28
SEP 5052	2"x1.5"	3	2	5	c	6.3 12.5 25.0	18.0 16.0 8.5	31

尺寸圖 Dimensions

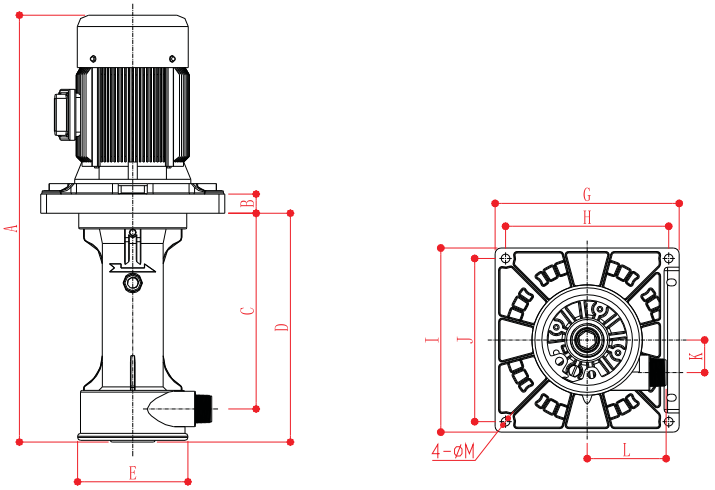

Unit:mm

型式Model	A	B	C	D	E	G	H	I	J	K	L	M
SEP 5022	712	32	337	395	190	320	280	320	280	56	136	15
SEP 5032	741	32	337	395	190	320	280	320	280	56	136	15
SEP 5052	756	32	337	395	190	320	280	320	280	56	136	15

零件圖表 Parts chart

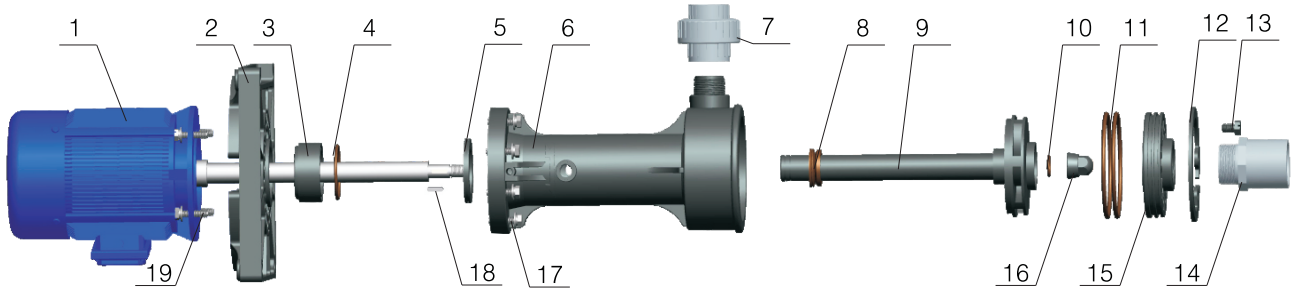

NO.	名稱 PARTS
1	電機 Motor
2	馬達連接座 Motor Spacer
3	液封座 Vapor Seal Seat
4	O環 Vapor Seal Seat O-Ring
5	下墊圈 Main Body Gasket
6	主體 Main Body
7	由任 Union
8	V環 V-Ring
9	葉輪 Impeller
10	O環 Impeller Nut O-Ring
11	上座O環 Front Cover O-ring
12	C型扣環 C-Clip
13	上座螺絲 Front Cover Screw
14	止閥接頭 Check Valve Joint
15	上座 Front Cover
16	葉輪螺帽 Impeller Nut
17	螺絲 Main Body Screw
18	葉輪鍵 Shaft Key
19	螺絲 Motor Screw

SEG SERIES

可空轉立式耐酸鹼泵
VERTICAL PUMP

化學氣體乾式軸封
Chemical vapor and dry vapor seal

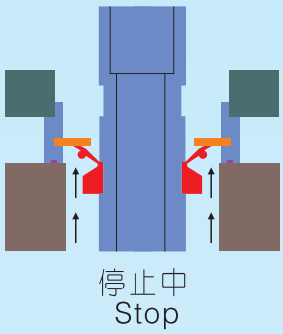

停止中
Stop

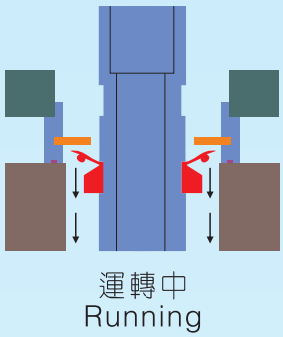

運轉中
Running

CAPACITY:6.3–90m³/h

型號說明 MODEL IDENTIFICATION

SEG P 50 3 2 E 5

1 2 3 4 5 6 7

1.機型編號 Model

SEG-可空轉立式泵 Idling-type vertical pump

2.泵體材質 Pump Body

P-PP(可以省略) F-PVDF E-CFRETFE

3.入口口徑 Inlet Diameter

50-2" 65-2.5" 75-3" 100-4"

4.馬力 Power

1-1HP 2-2HP 3-3HP 5-5HP 7-7.5HP 10-10HP 15-15HP

5.極數 Pole

4-4P 2-2P

6.密封材質 Seal

E-EPDM V-VITON N-NBR

7.頻率 Frequency

5-50HZ 6-60HZ

特點及優點

1.採用FRPP/PVDF材質射出成型。耐酸鹼，抗腐蝕性。適用溫度：FRPP-65℃以下，PVDF-90℃以下。
2.乾式軸封設計，防止酸氣進入馬達損壞培林。
3.可空轉使用，絕不會因空運轉而損壞。
4.可使用在含有結晶顆粒的液體。
5.適合各種酸鹼液循環、冷卻、噴洗設備、廢氣塔、蝕刻機、廢水處理等。
6.適合無電解鎳化學銅及各種特殊電鍍液之循環輸送。

Features and benefits

1.The pump is made by the injection molding of the FRPP/PVDF material, which is resistant to acid, alkaline and corrosion, with usage temperature of: Below 65℃ for FRPP, below 90℃ for PVDF.
2.Dry shaft seal design, preventing acid gas from penetrating motor to damage the bearing.
3.Able to conduct idling operation and will never be damaged due to idle running.
4.Able to work with liquids containing crystallized particles.
5.Adaptable to various circulation/cooling/spay-rinsing equipment of various acid and alkaline liquids,exhaust towers, engraving machine, waste water treatment, etc.
6.Adaptable to circulating transport of various special electroplate liquids and those electroless nickel and chemical copper.

性能曲線圖 Performance curve graph

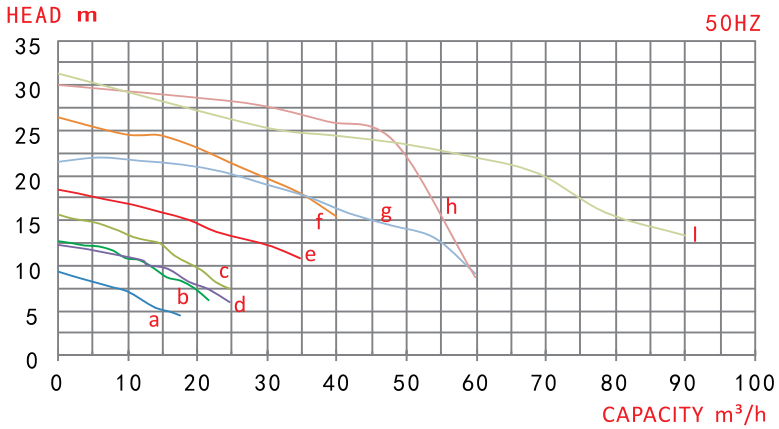

規格表 Specifications

測試介質：清水 / 比重：1.0
Test medium: Water / Proportion: 1.0

型式Model	口徑 Diameter (In-out)	動力Power			50HZ			重量 Weight (kg)
		相數 Phase (Φ)	極數 Pole (P)	馬力 Power (HP)	曲線 Curve	流量 Capacity (m³/h)	揚程 Head (m)	
SEG 5012	2"x1.5"	3	2	1	a	6.3 12.5 17.5	8.0 5.5 4.0	32
SEG 5022	2"x1.5"	3	2	2	b	6.3 12.5 22.0	12.0 10.0 5.5	37
SEG 5032	2"x1.5"	3	2	3	c	6.3 12.5 25.0	14.0 13.0 6.5	40
SEG 6522	2.5"x2"	3	2	2	d	12.5 20.0 25.0	10.5 7.5 5.5	45
SEG 6532	2.5"x2"	3	2	3	e	12.5 25.0 30.0	16.5 12.5 11.5	46
SEG 6552	2.5"x2"	3	2	5	f	12.5 25.0 40.0	25.0 21.0 14.0	60
SEG 7572	3"x2.5"	3	2	7.5	g	25.0 50.0 60.0	20.0 13.0 8.5	92
SEG 75102	3"x2.5"	3	2	10	h	25.0 50.0 63.0	27.0 23.0 8.5	110
SEG 100152	4"x4"	3	2	15	I	50.0 75.0 90.0	24.0 18.0 13.0	123

尺寸圖 Dimensions

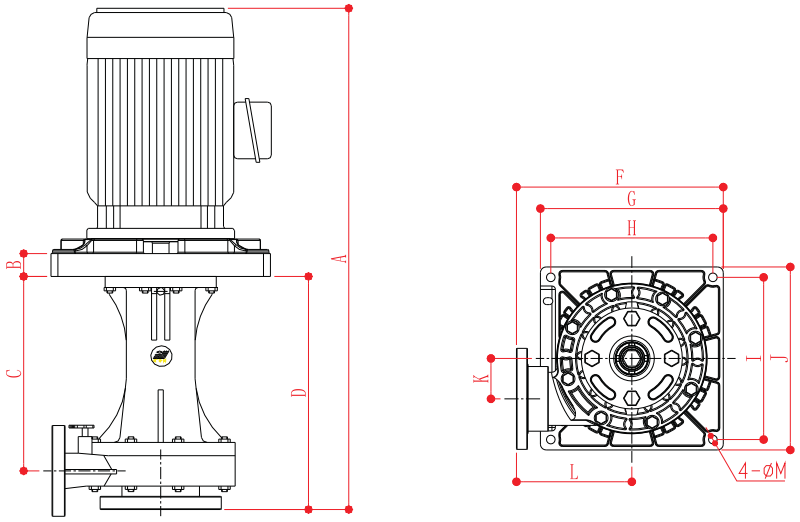

Unit:mm

型式Model	A	B	C	D	F	G	H	I	J	K	L	M
SEG 5012	714	32	355	355	325	320	280	280	320	67	165	15
SEG 5022	735	32	355	355	325	320	280	280	320	67	165	15
SEG 5032	764	32	355	355	325	320	280	280	320	67	165	15
SEG 6522	753	32	357	430	360	320	280	280	320	63	200	15
SEG 6532	770	32	357	430	360	320	280	280	320	63	200	15
SEG 6552	795	32	357	430	360	320	280	280	320	63	200	15
SEG 7572	875	32	357	430	360	320	280	280	320	63	200	15
SEG 75102	900	32	357	430	360	320	280	280	320	63	200	15
SEG 100152	920	32	362	430	360	320	280	280	320	68	200	15

零件圖表 Parts chart

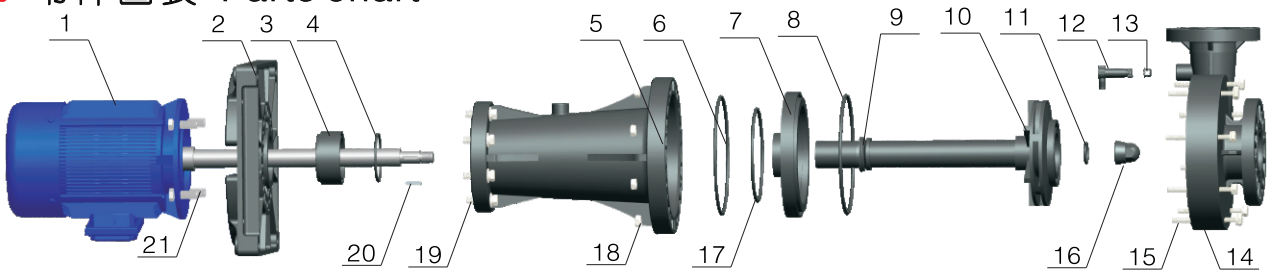

NO.	名稱 PARTS
1	電機 Motor
2	馬達連接座 Motor Spacer
3	液封陶瓷 Vapor Seal Seat
4	O環 Vapor Seal Seat O-Ring
5	主體 Main Body
6	O環 O-Ring
7	上座 Front Seat
8	上座O環 Front Seat O-Ring
9	V環 V-Ring
10	葉輪 Impeller
11	葉輪螺帽O環 Impeller Nut O-ring
12	排氣閥 Exhaust Valve
13	排氣閥墊片 Exhaust Valve Gasket
14	前蓋 Front Cover
15	螺絲 Screw Parts
16	葉輪螺帽 Impeller Nut
17	O環 O-Ring
18	螺帽 Nut
19	螺絲 Main Body Screw
20	葉輪鍵 Shaft Key
21	螺絲 Motor Screw

Mi kawa®
三川宏®
SAN CHUAN HUNG

SEB SERIES

可空轉立式耐酸鹼泵
VERTICAL PUMP

化學氣體乾式軸封
Chemical vapor and dry vapor seal

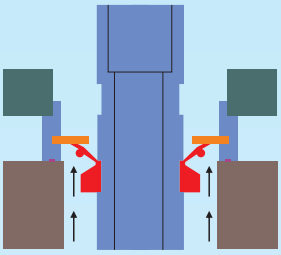

停止中
Stop

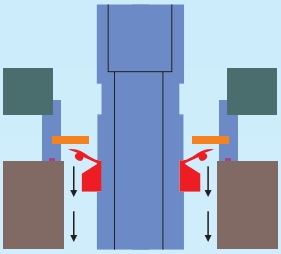

運轉中
Running

CAPACITY:6.3–95m³/h

型號說明 MODEL IDENTIFICATION

SEB P 50 3 2 E 5

1 | 2 | 3 | 4 | 5 | 6 | 7

1.機型編號 Model

SEB-可空轉立式泵 Idling-type vertical pump

2.泵體材質 Pump Body

P-PP(可以省略) F-PVDF E-CFRETFE

3.入口口徑 Inlet Diameter

50-2" 65-2.5" 75-3" 100-4"

4.馬力 Power

2-2HP 3-3HP 5-5HP 7-7.5HP 10-10HP 15-15HP

5.極數 Pole

4-4P 2-2P

6.密封材質 Seal

E-EPDM V-VITON N-NBR

7.頻率 Frequency

5-50HZ 6-60HZ

SEB SERIES
可空轉立式耐酸鹼泵

特點及優點

1.採用FRPP/PVDF材質射出成型。耐酸鹼，抗腐蝕性。適用溫度：FRPP-65℃以下，PVDF-90℃以下。
2.乾式軸封設計，防止酸氣進入馬達損壞培林。
3.可空轉使用，絕不會因空運轉而損壞。
4.可使用在含有結晶顆粒的液體。
5.適合各種酸鹼液循環、冷卻、噴洗設備、廢氣塔、蝕刻機、廢水處理等。
6.適合無電解鎳化學銅及各種特殊電鍍液之循環輸送。

Features and benefits

1.The pump is made by the injection molding of the FRPP/PVDF material, which is resistant to acid, alkaline and corrosion, with usage temperature of: Below 65℃ for FRPP, below 90℃ for PVDF.
2.Dry shaft seal design, preventing acid gas from penetrating motor to damage the bearing.
3.Able to conduct idling operation and will never be damaged due to idle running.
4.Able to work with liquids containing crystallized particles.
5.Adaptable to various circulation/cooling/spay-rinsing equipment of various acid and alkaline liquids,exhaust towers, engraving machine, waste water treatment, etc.
6.Adaptable to circulating transport of various special electroplate liquids and those electroless nickel and chemical copper.

性能曲線圖 Performance curve graph

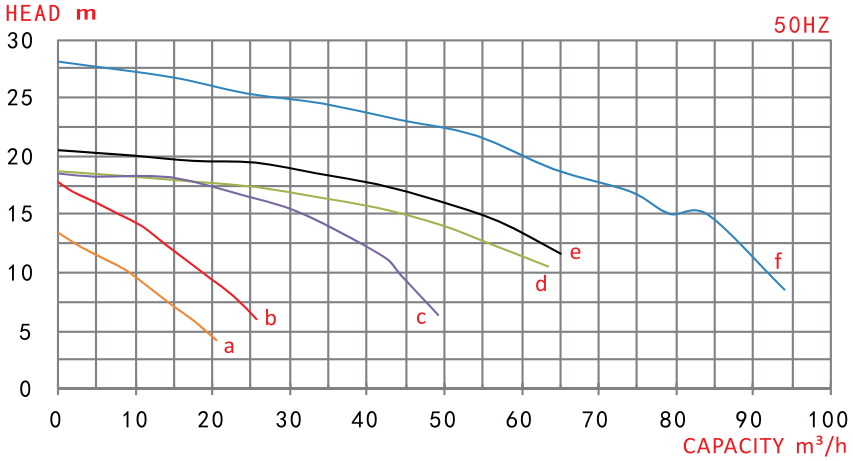

規格表 Specifications

測試介質：清水 / 比重：1.0
Test medium: Water / Proportion: 1.0

型式Model	口徑 Diameter (In-out)	動力Power			50HZ			重量 Weight (kg)
		相數 Phase (Φ)	極數 Pole (P)	馬力 Power (HP)	曲線 Curve	流量 Capacity (m³/h)	揚程 Head (m)	
SEB 5022	2"x2"	3	2	2	a	6.3 12.5 20.0	11.0 8.5 4.0	30
SEB 5032	2"x2"	3	2	3	b	6.3 12.5 25.0	15.0 13.0 6.0	34
SEB 6552	2.5"x2.5"	3	2	5	c	12.5 25.0 50.0	18.0 17.0 6.5	45
SEB 7572	3"x3"	3	2	7.5	d	25.0 50.0 64.0	17.0 14.0 10.5	67
SEB 75102	3"x3"	3	2	10	e	25.0 50.0 65.0	19.5 16.0 11.0	105
SEB 100152	4"x4"	3	2	15	f	50.0 75.0 95.0	22.0 17.0 8.5	118

尺寸圖 Dimensions

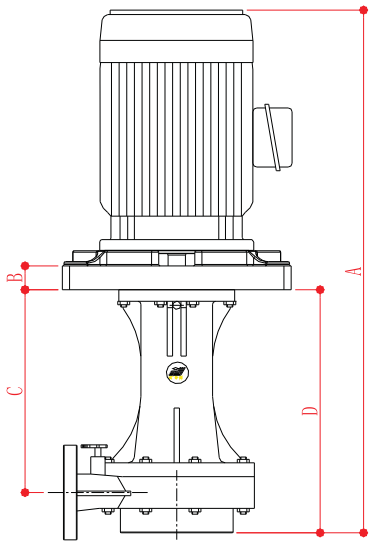

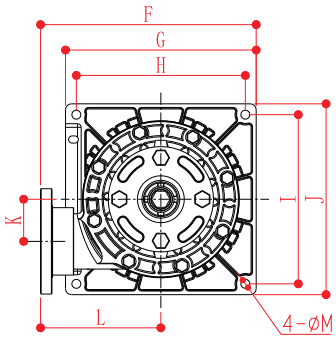

Unit:mm

型式Model	A	B	C	D	F	G	H	I	J	K	L	M
SEB 5022	753	32	357	430	360	320	280	280	320	68	200	15
SEB 5032	775	32	357	430	360	320	280	280	320	68	200	15
SEB 6552	780	32	357	430	360	320	280	280	320	68	200	15
SEB 7572	875	32	357	430	360	320	280	280	320	68	200	15
SEB 75102	890	32	357	430	360	320	280	280	320	68	200	15
SEB 100152	900	32	357	430	360	320	280	280	320	68	200	15

零件圖表 Parts chart

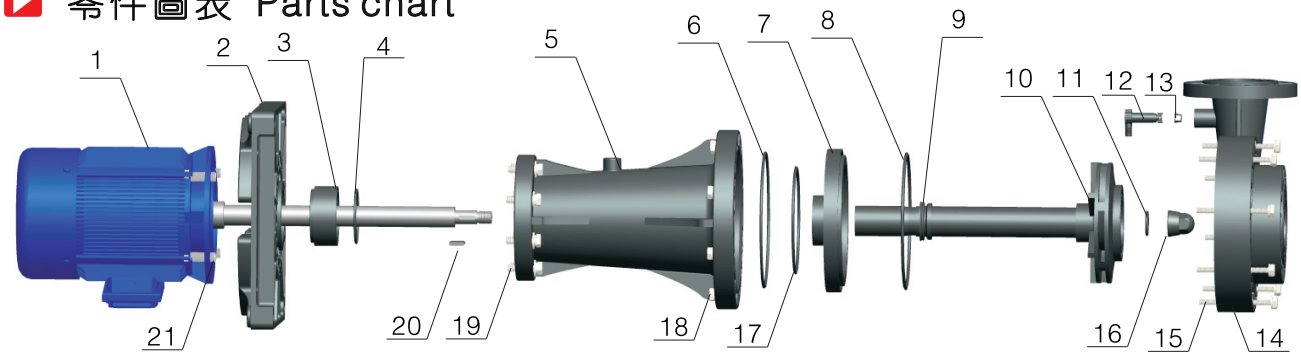

NO.	名稱 PARTS
1	電機 Motor
2	馬達連接座 Motor Spacer
3	液封陶瓷 Vapor Seal Seat
4	O環 Vapor Seal Seat O-Ring
5	主體 Main Body
6	O環 O-Ring
7	上座 Front Seat
8	上座O環 Front Seat O-Ring
9	V環 V-Ring
10	葉輪 Impeller
11	葉輪螺帽O環 Impeller Nut O-Ring
12	排氣閥 Exhaust Valve
13	排氣閥墊片Exhaust Valve Gasket
14	前蓋Front Cover
15	螺絲 Screw Parts
16	葉輪螺帽 Impeller Nut
17	O環 O-Ring
18	螺帽 Nut
19	螺絲 Main Body Screw
20	葉輪鍵 Shaft Key
21	螺絲 Motor Screw

SEC SERIES

可空轉立式耐酸鹼泵
VERTICAL PUMP

化學氣體乾式軸封
Chemical vapor and dry vapor seal

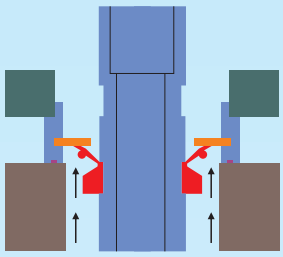

停止中
Stop

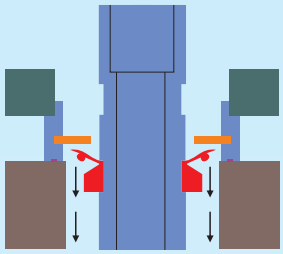

運轉中
Running

CAPACITY:6.3–95m³/h

型號說明 MODEL IDENTIFICATION

SEC P 50 3 2 E 5

1 | 2 | 3 | 4 | 5 | 6 | 7

1.機型編號 Model

SEC-圓盤可空轉立式耐酸鹼泵 Disc idling-type vertical pump

2.泵體材質 Pump Body

P-PP(可以省略) F-PVDF E-CFRETFE

3.入口口徑 Inlet Diameter

50-2" 65-2.5" 75-3" 100-4"

4.馬力 Power

2-2HP 3-3HP 5-5HP 7-7.5HP 10-10HP 15-15HP

5.極數 Pole

4-4P 2-2P

6.密封材質 Seal

E-EPDM V-VITON N-NBR

7.頻率 Frequency

5-50HZ 6-60HZ

SEC SERIES
可空轉立式耐酸鹼泵

特點及優點

1.採用FRPP/PVDF材質射出成型。耐酸鹼，抗腐蝕性。適用溫度：FRPP-65℃以下，PVDF-90℃以下。
2.葉輪採用一體成型設計，機械強度高，使用壽命長。
3.乾式軸封設計，防止酸氣進入馬達損壞培林。
4.可空轉使用，絕不會因空運轉而損壞。
5.可使用在含有結晶顆粒的液體。
6.大圓盤可防止槽內蒸氣逸散污染環境。

Features and benefits

1.The pump is made by the injection molding of the FRPP/PVDF material, which is resistant to acid, alkaline and corrosion, with usage temperature of: Below 65℃ for FRPP, below 90℃ for PVDF.
2.The impeller is designed for whole casting, with high mechanical strength and long service life.
3.Dry shaft seal design, preventing acid gas from penetrating motor to damage the bearing.
4.Able to conduct idling operation and will never be damaged due to idle running.
5.Able to work with liquids containing crystallized particles.
6.Large disc can prevent steam diffusion of the tank from polluting the environment.

性能曲線圖 Performance curve graph

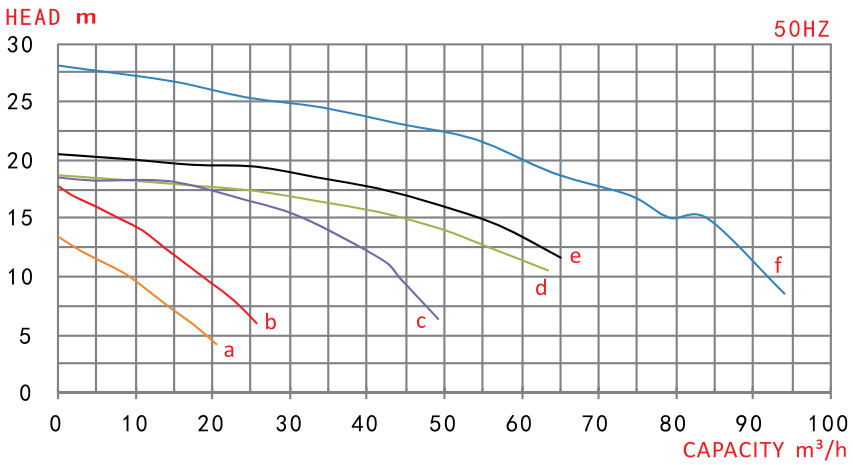

規格表 Specifications

測試介質：清水 / 比重：1.0
Test medium: Water / Proportion: 1.0

型式Model	口徑 Diameter (In-out)	動力Power			50HZ			重量 Weight (kg)
		相數 Phase (Φ)	極數 Pole (P)	馬力 Power (HP)	曲線 Curve	流量 Capacity (m³/h)	揚程 Head (m)	
SEC 5022	2"x2"	3	2	2	a	6.3 12.5 20.0	11.0 8.5 4.0	30
SEC 5032	2"x2"	3	2	3	b	6.3 12.5 25.0	15.0 13.0 6.0	34
SEC 6552	2.5"x2.5"	3	2	5	c	12.5 25.0 50.0	18.0 17.0 6.5	45
SEC 6572	2.5"x2.5"	3	2	7.5	d	25.0 50.0 64.0	17.0 14.0 10.5	67
SEC 65102	2.5"x2.5"	3	2	10	e	25.0 50.0 65.0	19.5 16.0 11.0	80
SEC 100152	4"x4"	3	2	15	f	50.0 75.0 95.0	22.0 17.0 8.5	100

尺寸圖 Dimensions

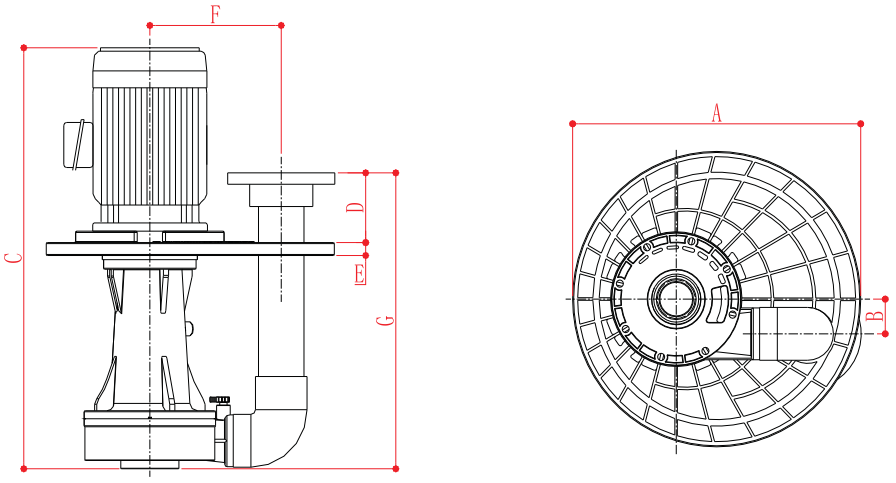

Unit:mm

型式Model	A	B	C	D	E	F	G
SEC 5022	485	67	740	149	25	236	560
SEC 5032	485	67	755	149	25	236	560
SEC 6552	485	67	780	149	25	236	560
SEC 6572	570	67	840	149	25	270	560
SEC 65102	570	67	860	149	25	270	560
SEC 100152	625	67	890	149	25	270	560

零件圖表 Parts chart

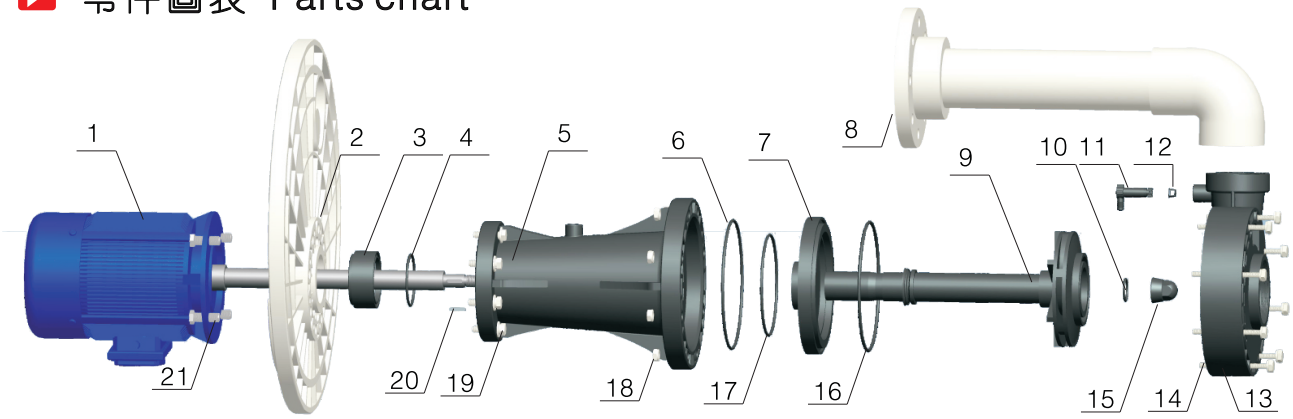

NO.	名稱 PARTS
1	電機 Motor
2	馬達連接座 Motor Spacer
3	液封座 Vapor Seal Seat
4	O環 Vapor Seal Seat O-Ring
5	主體 Main Body
6	O環 O-Ring
7	上座 Front Seat
8	出口管 Outlet Pipe
9	葉輪 Impeller
10	葉輪螺帽O環 Impeller Nut O-ring
11	排氣閥 Exhaust Valve
12	排氣閥墊片 Exhaust Valve Gasket
13	前蓋 Front Cover
14	螺絲 Screw Parts
15	葉輪螺帽 Impeller Nut
16	O環 O-Ring
17	O環 O-Ring
18	螺帽 Nut
19	螺絲 Main Body Screw
20	葉輪鍵 Shaft Key
21	螺絲 Motor Screw

SED SERIES

不銹鋼立式耐酸鹼泵
STAINLESS STEEL VERTICAL PUMP

化學氣體乾式軸封
Chemical vapor and dry vapor seal

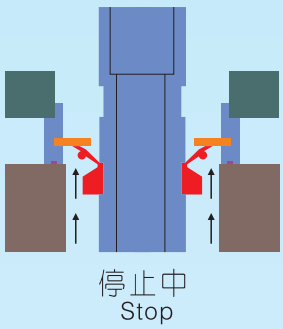

停止中
Stop

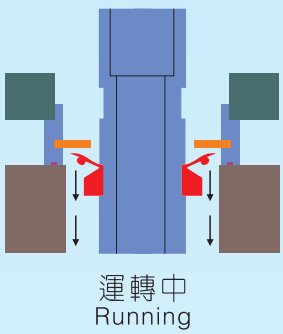

運轉中
Running

CAPACITY:5.7–254.8m³/h

型號說明 MODEL IDENTIFICATION

SED A 50 3 2 E 5

1	2	3	4	5	6	7

1.機型編號 Model

SED-可空轉立式不銹鋼泵 Idling-type vertical stainless steel pump

2.泵體材質 Pump Body

A-SUS304 B-SUS316 T-TI

3.入口口徑 Inlet Diameter

25-1" 40-1.5" 50-2" 65-2.5" 75-3" 100-4"

4.馬力 Power

0-1/2HP 1-1HP 2-2HP 3-3HP 5-5HP

5.極數 Pole

4-4P 2-2P

6.密封材質 Seal

E-EPDM V-VITON N-NBR

7.頻率 Frequency

5-50HZ 6-60HZ

SED SERIES
可空轉立式耐酸鹼泵

特點及優點

1.採用SUS304/SUS316材質成型。耐酸鹼，抗腐蝕性，適用溫度90℃以上。
2.乾式軸封設計，防止酸氣進入馬達損壞培林。
3.可空轉使用，絕不會因空運轉而損壞。
4.可使用在含有結晶顆粒的液體。
5.適合各種酸鹼液循環、冷卻、噴洗設備、廢氣塔、蝕刻機、廢水處理等。
6.適合無電解鎳化學銅及各種特殊電鍍液之循環輸送。

Features and benefits

1.The pump is casted in stainless steel 304/316. It is featured as acid and alkaline resistance and corrosion resistance, with its applicable temperature of above 90℃.
2.Dry shaft seal design, preventing acid gas from penetrating motor to damage the bearing.
3.Able to conduct idling operation and will never be damaged due to idle running.
4.Able to work with liquids containing crystallized particles.
5.Adaptable to various circulation/cooling/spay rinsing equipment of various acid and alkaline liquids,exhaust towers, engraving machine, waste water treatment, etc.
6.Adaptable to circulating transport of various special electroplate liquids and those electroless nickel and chemical copper.

規格表 Specifications

測試介質：清水 / 比重：1.0
Test medium: Water / Proportion: 1.0

型式Model	口徑 Diameter (In-out)	動力Power			50HZ		
		相數 Phase (Φ)	極數 Pole (P)	馬力 Power (HP)	轉速 Speed (r/min)	流量 Capacity (m^3/h)	揚程 Head (m)
SEDA/B2502	1"x1"	3	2	0.5	2850	5.7	13
SEDA/B4012	1.5"x1.5"	3	2	1	2850	18.6	10
SEDA/B4022	1.5"x1.5"	3	2	2	2850	21	14.5
SEDA/B5022	2"x2"	3	2	2	2850	30	18
SEDA/B5032	2"x2"	3	2	3	2850	32.4	19.5
SEDA/B6532	2.5"x2.5"	3	2	3	2850	36	20
SEDA/B6552	2.5"x2.5"	3	2	5	2850	48	21
SEDA/B7572	3"x2.5"	3	2	7.5	2850	54	22
SEDA/B75102	3"x2.5"	3	2	10	2850	55	25
SEDA/B100152	4"x4"	3	2	15	2850	84	25
SEDA/B100202	4"x4"	3	2	20	2850	90	25
SEDA/B100252	4"x4"	3	2	25	2850	111.3	15
SEDA/B125302	5"x5"	3	2	30	2850	127.8	15
SEDA/B150402	6"x6"	3	2	40	2850	254.8	10

尺寸圖 Dimensions

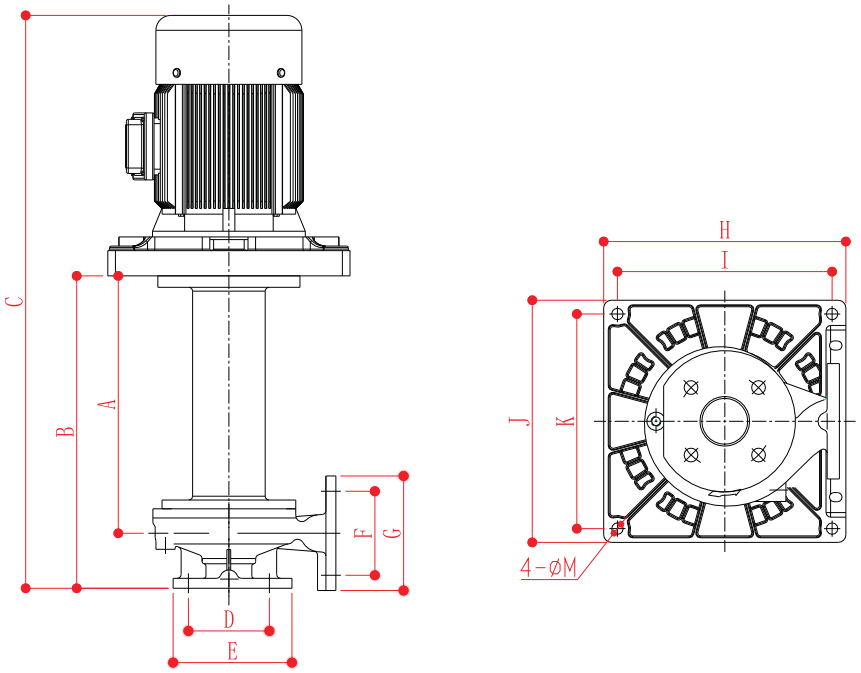

Unit:mm

型式Model	A	B	C	D	E	F	G	H	I	J	K	M
SEDA/B2502	260	300	565	78	93	78	93	260	222	260	222	15
SEDA/B4012	330	370	635	78	93	78	93	260	222	260	222	15
SEDA/B4022	330	370	705	78	93	78	93	260	222	260	222	15
SEDA/B5022	335	390	725	95	118	95	118	260	222	260	222	15
SEDA/B5032	335	390	725	95	118	95	118	260	222	260	222	15
SEDA/B6532	340	410	745	120	150	120	150	260	222	260	222	15
SEDA/B6552	340	410	795	120	150	120	150	260	222	260	222	15
SEDA/B7572	360	440	835	120	150	120	150	350	300	350	300	18
SEDA/B75102	360	440	873	120	150	120	150	350	300	350	300	18
SEDA/B100152	400	500	1020	180	210	180	210	400	350	400	350	18
SEDA/B100202	400	500	1020	180	210	180	210	400	350	400	350	18
SEDA/B100252	450	550	1110	180	210	180	210	400	350	400	350	20
SEDA/B125302	450	550	1130	210	255	210	255	450	400	450	400	20
SEDA/B150402	450	550	1170	210	255	210	255	450	400	450	400	20